Highgate Wood: the Pottery and its Production

A. E. BROWN
H. L. SHELDON

The Final Seasons: 1972–74

DURING THESE three seasons, work was carried out to the north and north-west of the area previously excavated (Fig. 1).[1] Ditch 1, which had a total length of 310ft., terminated in a puddling pit filled with clean green clay (Puddling Pit 2). Set in the pit above this clay were the fragmentary remains of a kiln (Kiln 9), consisting of fire-bars lying in a mass of burnt clay and pottery debris. Just north of this, another ditch (Ditch 4) started and ran down to a further puddling pit (3); both contained light grey clay, presumably the result of silting. Above this silt, at the southern end of the ditch, occurred a scatter of charcoal and burnt matter, probably derived from the rakings of Kiln 9.

Ditch 5 branched off to the west from Ditch 1 some 35ft. from its northern end. It ran roughly along the 323ft. contour, deepening just before its junction with a circular ditch (see Early Working Area on Fig. 1). The latter, which had been recut in two places, probably defined a working area; its eastern side was deeper, presumably to retain water

1. The 1966-1971 excavations have been described in *London Archaeol* **1**, no.2, 38-44, no.7, 150-154, no.13, 300-303.

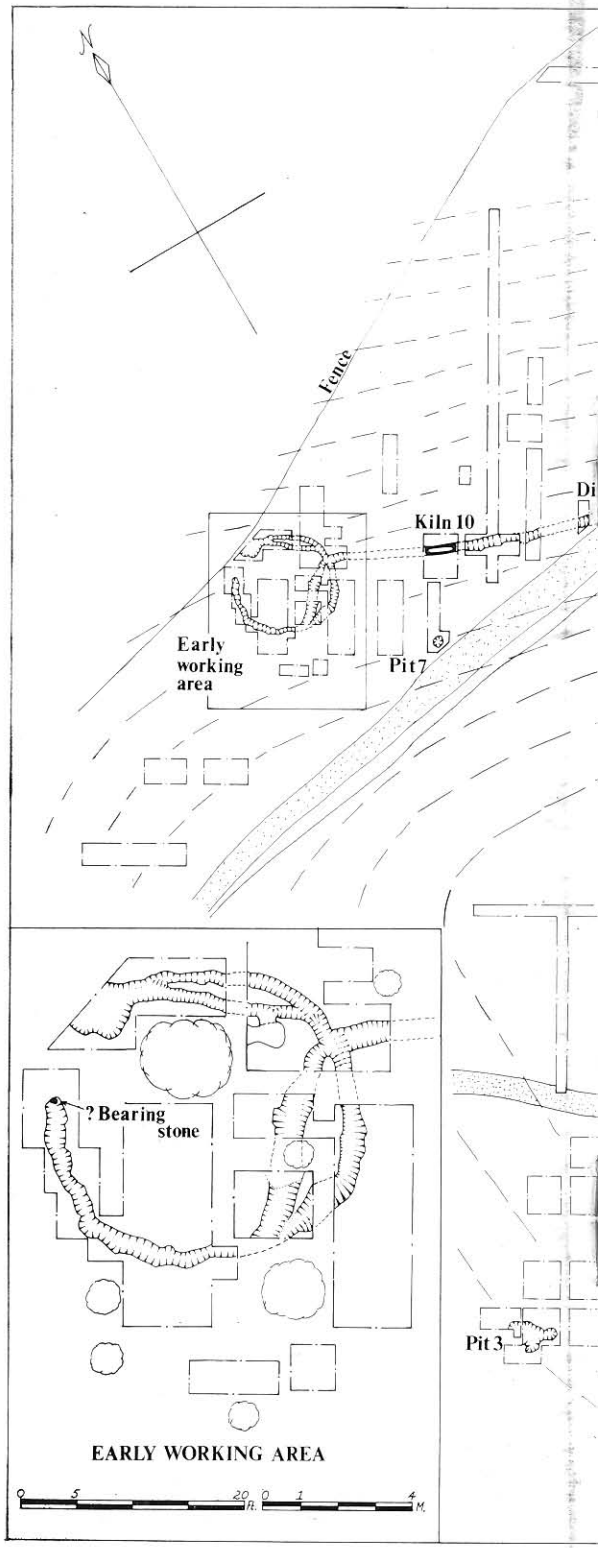

Fig. 1. A plan of the features found with an enlargement of the early working area.

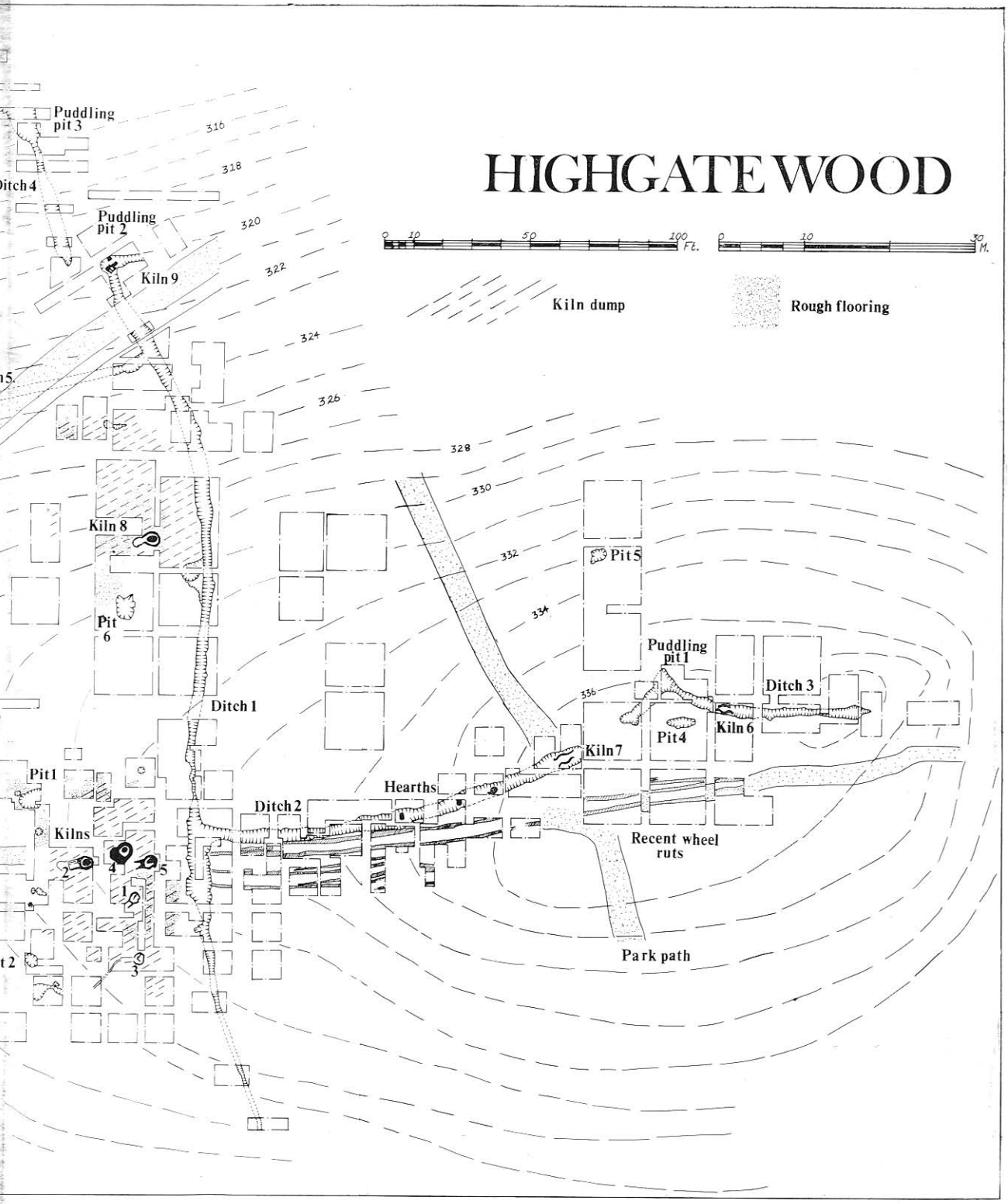
HIGHGATE WOOD
0 10 50 100 Ft.
0 10 30 M.
Kiln dump
Rough flooring
Puddling pit 3
Ditch 4
Puddling pit 2
Kiln 9
316
318
320
322
324
326
328
330
332
334
336
Kiln 8
Pit 6
Ditch 1
Pit 5
Puddling pit 1
Ditch 3
Kiln 6
Pit 4
Kiln 7
Hearths
Ditch 2
Pit 1
Kilns
Recent wheel ruts
Park path

for use during pottery manufacture. No structures were found within the circular area, but a broken quern with a cup-shaped depression on its upper face lay inside the butt of the ditch. This may have been the bearing stone of a potter's wheel.

Ditch 5 contained a kiln (Kiln 10) similar to those found in Ditches 2 and 3, the pottery from which is illustrated in Fig. 3.

The Highgate Pottery: Phases and Fabrics

The excavations carried out since 1966 on this northern ridge of Highgate Wood have shown that pottery was made on the site from c. A.D. 50-160. It is possible that four phases of production (I-IV) can be defined and that three distinct fabric types making use of grass (A), grog (B), and sand (C) for tempering can be identified. (Table 1).

Possible Date	Production Phase	Fabrics
c. A.D. 50-60	I	A and B
c. A.D. 70-100	II	B with some C
c. A.D. 100-140	III	C
c. A.D. 140-160	IV	C

TABLE 1

Within the first phase, Ditches 1, 2 and 5 were dug to form a seemingly unitary system designed to carry water down to a puddling pit (2) and the working area. (Fig. 1). The earliest pottery, made in fabrics A and B, contains "Belgic" vessels and comes from the circular ditch defining the working area. It should probably be dated to c. A.D. 50-60 (Fig. 2).

During the second phase, the ditches seem to have been utilised as settings for kilns in which predominantly Fabric B pottery was made (Fig. 3). Kilns 6, 7, 10 and probably 9, as well as Ditches 3 and 4 belong to this phase, for which a date of c. A.D. 70-100 is suggested.

Much of the Highgate pottery production probably took place c. A.D. 100–140; some of it was made in Kilns 1, 3, 4, 5 and 8. This third phase involved a change in technology, both in the kilns and the wares. The kilns were built up from the ground, while the pottery was sand-tempered (Fabric C) often partially covered by grey or white slip[2], and sometimes with applied decoration (Fig. 4 and 5).

Kiln 2, the most westerly on the main rubbish dump, and different from the others in respect of its tiled flue, probably belongs to a fourth and final phase. Here the pottery, still in Fabric C, is generally more developed and could well have been made in the period c. A.D. 140-160 (Fig. 6).

The three fabrics can clearly be related to the phases of production, the grass-tempered (A) occurs only in Phase I and is confined to simple up-turned or bead-rimmed jars. The grog-tempered (B) occurs both in Phase I and Phase II; it is of interest that the finer wares in both phases contain smaller sized grog, and a higher proportion (between 10% and 30%) of sand. A further similarity between Phases I and II is the colour of the pottery, often grey in section, with more oxidised brown or red-brown surfaces.

The reduced grey sandy fabric (C) is characteristic of the 'Romanised' Phase III and IV wares. Here the naturally occurring fine sand constitutes about 30% of the fabric volume. Given the wide variations in the sand content of the clay on the site, this implies that some control was being exercised by the potters. All the vessels produced at Highgate were probably wheel-made, although this seems certain only with Fabric C, and a proportion of Fabric B wares.

Itinerants and Markets

There is no evidence to suggest a permanent Roman settlement on the ridge in which pottery production could have formed some part. No buildings have been found and the small amount of non-industrial material could readily be accounted for as the potters' personal or domestic possessions. However, stratigraphy and the developments in both vessel form and fabric suggest that the ridge was visited for the purpose of pottery manufacture for a period of perhaps some 100 years.

Yet the small number of kilns found (10) indicates only limited exploitation of the natural clay and timber resources. Indeed it has already been argued that the total volume of debris might result from an overall production of some 25 weeks.[3]

Clearly small-scale production over a long period, in the absence of associated settlement, would suggest that the potters were itinerant. It seems that the makers of the easily traceable mortaria moved about,[4] and if the supply of skilled potters within the Province was limited, then it seems plausible that many would travel between the known settlements in order to satisfy demand. Other factors might limit a season's production at one site such as Highgate: for example the quantity which could be brought to market, or which the local shopkeepers might buy.

If the assumption of itinerant potters is accepted, then the first phase might be interpreted as one in which native craftsmen opened the site to produce

2. The iron-free slip clay was presumably brought to the site by the potters.

3. In "Horniman Museum Kiln Experiment at Highgate Wood", *London Archaeol* **2**, no.1, 12-17 and no.3, 53-59.

4. "A Kiln of the Potter Doinus", *Archaeol J*, **129** (1972) 69-88, especially 82-88.

vessels for either the military or civilian market in pre-Boudiccan London.[5] The second phase could possibly be a continuation of this production into the later years of the 1st century. The similarity of the Fabric B pottery in both phases might well suggest that the same 'firm' or family of potters remained at work.

The third phase with its Romanised wares and more developed technology represents a break with tradition. Although presumably by this time the original potters were dead, the producers could still have belonged to the same 'firm' but making finer quality wares for a more selective market. Perhaps Phase IV is best seen as a further development from Phase III, but at about A.D. 160 for some reason pottery manufacture in Highgate Wood stopped.

The other known pottery production centre relatively near London, Brockley Hill on Watling Street, also seems to have ceased production at about A.D. 160. The Brockley Hill wares contrast strongly with the Highgate products; there was a marked concentration from the pre-Flavian period onwards on Roman forms such as flagons and mortaria, and the fabric colour was white, buff or red. Perhaps this implies that work took place under the control of Continental, rather than native potters; certainly it suggests that both sites were serving different sections of the market.[6]

Why Highgate ceased production c. A.D. 160 might be explained by the internal economies of the pottery industry, or by some wider social reason. It is possible that it became cheaper to transport pottery over long distances from larger and more permanent production centres, such as the Nene valley. There are certainly parallels for this in the finer wares from Northamptonshire and Oxfordshire made in the later Roman period.

However, a more general view might be put forward. It has long been realised, on the evidence of material finds from London, that there is a relative scarcity of pottery from the period c. 160 to the latter part of the 3rd century.[7] Also, the series of recent Southwark excavations suggests that the clay and timber houses which grew up along the main roads were abandoned just after the middle of the 2nd century. and no evidence of further occupation in the suburb until at least the early 3rd century has been obtained.

This could suggest a decline in the local population, which by reducing the market, would certainly affect the production of pottery at sites such as Highgate, Brockley Hill and even Verulamium.[8] Whether the cause was cataclysmic or not,[9] the Highgate pottery was never re-established, although it is tempting to see traces of its products in the white slipped grey wares, which were produced in the little studied Alice Holt potteries on the Surrey-Hampshire borders in the later years of Roman Britain.

Phase I c. A.D. 50-60

The pottery from the circular ditch contained both Fabric A and Fabric B vessels, although the types were not stratigraphically distinct (Fig. 2). The former were simple bead or up–turned rim jars with "pock-marked" surfaces probably because the vegetable filler had burnt out during the firing (Fig. 2: 8, 10–11, 17–20). Similar forms were made in Fabric B (Fig. 2: 9, 12, 21–22), but more noticeable were the "Belgic" pots, especially the series of cordoned and carinated bowls (Fig. 2: 3-7). Irrespective of fabric type, most of the pottery was dark brown to red–brown on the surface and with a grey core.

It seems probable that this first phase took place between c. A.D. 50–60. Certainly the "Belgic" forms are similar to vessels from Camulodunum, probably current between the Roman conquest and the insurrection of A.D. 60-61.[10] Manufacturing parallels might be seen from Hardingstone, Northants., where bead-rim jars and "vessels in Belgic tradition" were produced "during Claudio–Neronian times."[11]

Evidence of Phase I Highgate pottery from London, the probable market, is so far lacking.[12] However, only one sizeable pre-Boudiccan group has been published from the City, and that seems to have been contemporary with the disaster.[13] Southwark has yet to yield convincing pre–Boudiccan levels, and only one possible Highgate sherd occurs in

5. In *C.B.A. Research Report* 10 (1973) 1-5, Graham Webster suggests that in response to the demand generated by the Conquest, native potters "could do no more than produce the traditional wares which they were accustomed to, but in greater quantity."
6. For Stephen Castle's important work at Brockley Hill, see especially, *Archaeol J*, **129** (1972) and *London Archaeol* **2**, no.2, 36-9 and no.4, 78-83.
7. Information from Ralph Merrifield.
8. *Insulae* XIII seems to have been abandoned after a fire in c.A.D. 165. S. Frere, *Verulamium*, Society of Antiquaries (1972).
9. If it was cataclysmic, the cause might have been the outbreaks of plague which began in A.D. 166. J. G. Gilliam summarises scholars' views but suggests that the plague did not decimate the Empire's population to any great extent; *American J of Philology*, **82**, 3 (1961) 225-251. W. S. Penn thought that it might have led to the infant burials at Springhead; *Archaeologia Cantiana*, **82** (1967) 263-271.
10. See C. Hawkes and M. Hull, *Camulodunum* (1947) especially Form 216.
11. *Excavations at Hardingstone, Northants.* 1967-8 (1969), especially Fig. 12, 69, 71 and 74. P. J. Woods suggests that the pottery "may have been made by potters following in the wake of the Roman Army."
12. We are grateful to Peter Marsden for his comments on this.
13. *Trans London and Middlesex Archaeol Soc*, **11**, part 3 (1954) 244-259.

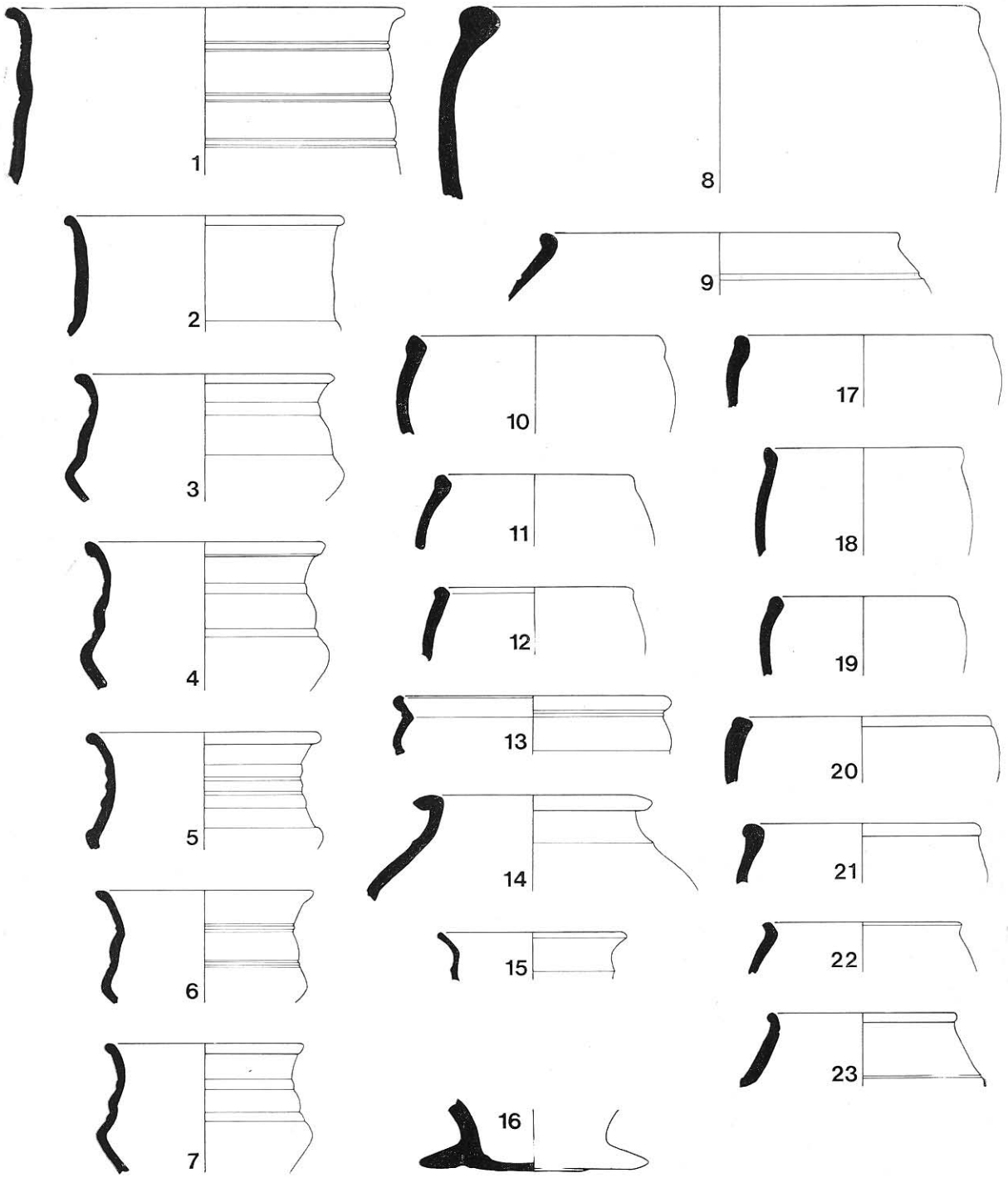

Fig. 2. Phase I (A.D. 50-60): pottery from the circular ditch.($\frac{1}{4}$)

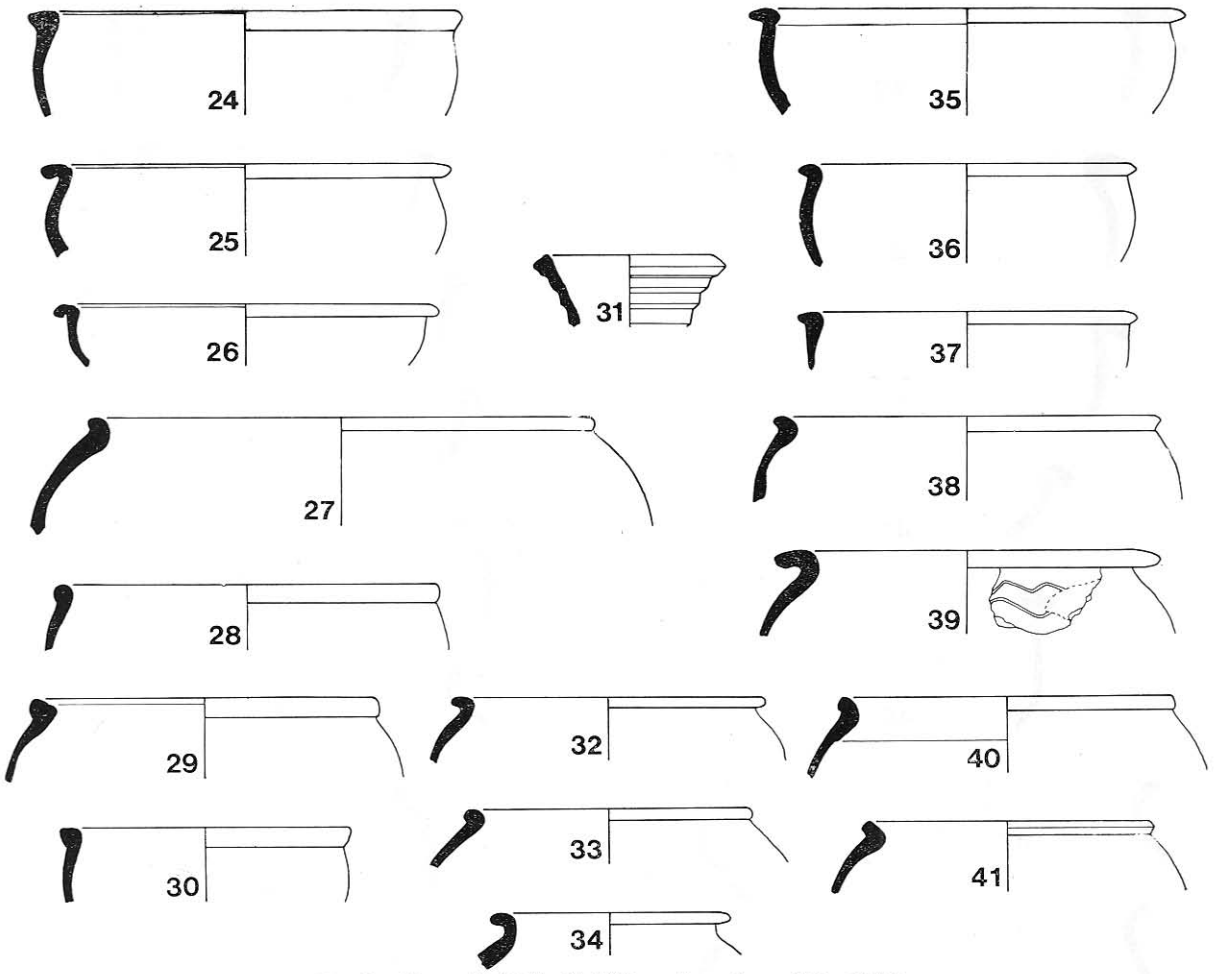

Fig. 3. Phase II (A.D. 70-100): pottery from Kiln 10.($\frac{1}{4}$)

the substantial rubbish deposits dated from c. A.D. 60-80 at 207 Borough High Street.[14]

Phase II c. A.D. 70-100

The pottery associated with the ditch kilns 6, 7 and 10 is mainly of Fabric B type, although sandier vessels do occur. Commonly Fabric B vessel surfaces vary from dark brown to a brownish–red, although the cores are uniformly grey. Only pottery from Kiln 10 is illustrated here (Fig. 3), but examination of about 400 Fabric B rims from various contexts in Ditch 1 and Ditch 2 suggest that nearly half the vessels found are bowls with out-turned rims (Fig. 3: 24–26, 30, 35–37). About a third could be described as bead–rimmed jars (Fig. 3: 27-29, 33, 38, 40–41) and a smaller proportion as everted–rim jars (Fig. 3: 34). Decoration on Fabric B vessels is usually restricted to wavy lines incised around the bodies of bowls (Fig. 3: 39).[15]

Little internal dating evidence exists for this phase of Highgate production. However, a red-bodied cream-slipped ring–neck flagon (Fig. 3: 31) of the type probably made at Brockley Hill in the period c. A.D. 70–100 was found amongst the pottery in Kiln 10.[16]

External evidence would also suggest a later 1st century date. At Aldgate grogged bead-rim jars were found in layers regarded as Neronian and Flavian (c. A.D. 50-100).[17] In Southwark, at Toppings Wharf,

14. Reference is made to a number of Southwark sites excavated by SAEC between 1972-74, which should be published in 1975. They include: 207 Borough High Street (1972-3); 106 Borough High Street (1973-4); 93-95 Borough High Street (1974); 1-7 St. Thomas's Street (1974).

15. For more of these bowls see *London Archaeol* **1**, no.13, 303.

16. *Archaeol J*, **129** (1972) Fig. 2 no.12.

17. "Excavations at Aldgate and Bush Lane", *Trans London and Middlesex Archaeol Soc* **24** (1973) 1-73 see for example Fig. 8, no.1 and Fig. 16, no.218.

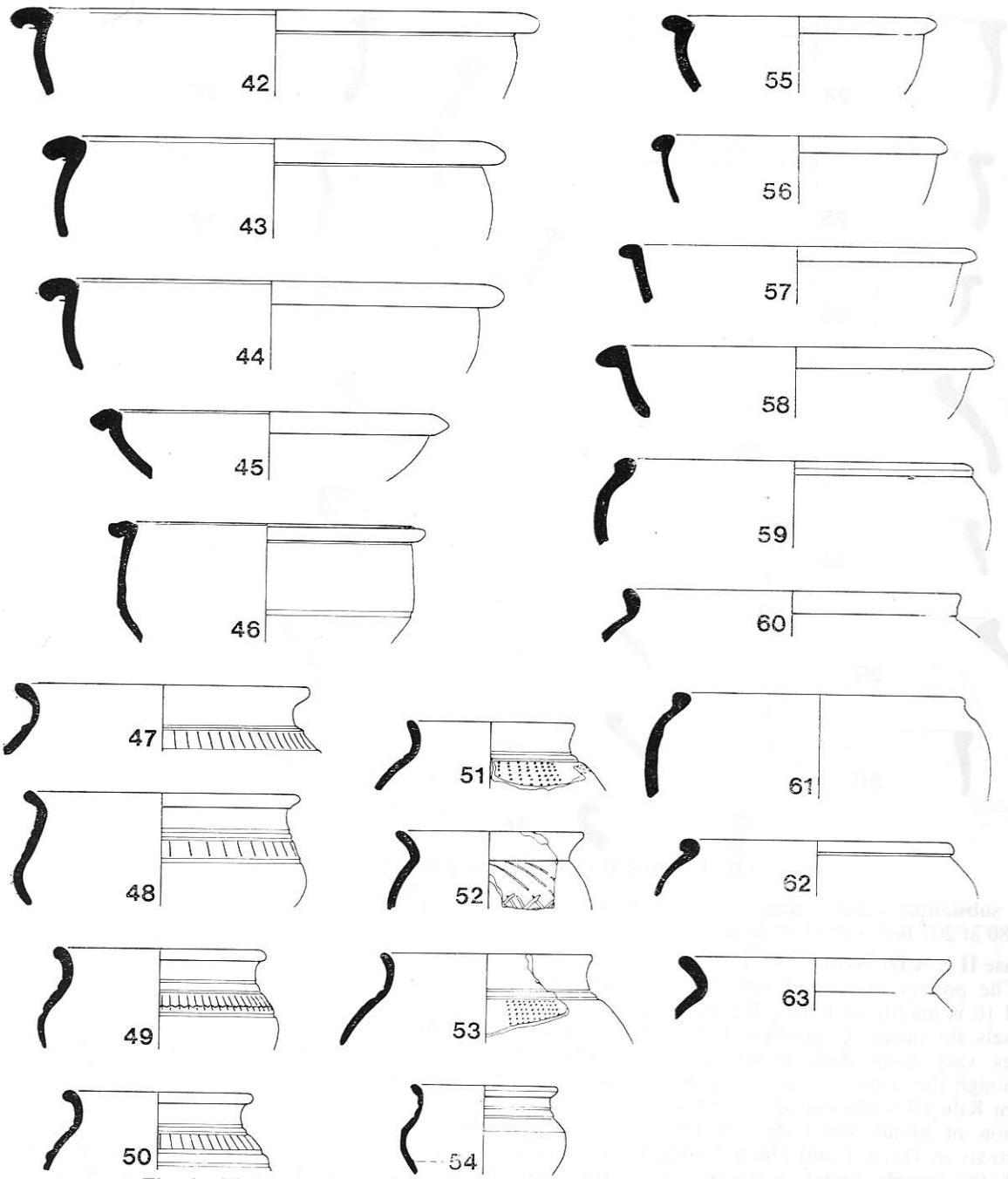

Fig. 4. Phase III (A.D. 100-140): pottery from the northern rubbish dump.($\frac{1}{4}$)

similar grogged vessels occur in Flavian (c. 70–100 and Flavian-Trajanic (c. 90-110) levels.[18] They are, however, absent from the sizeable deposits mentioned above (c. 60–80) from 207 Borough High Street.

18. "Excavations at Toppings and Sun Wharves", *Trans London and Middlesex Archaeol Soc.* **25** (1974) 1-116, Fig. 22, 9; Fig. 24, 68; Fig. 25, 81; Fig. 27, 153; Fig. 28, 159; Fig. 29, 181.

Phase III c. A.D. 100–140

Most of the pottery debris from Highgate Wood belongs to Phase III; much of it was found on the

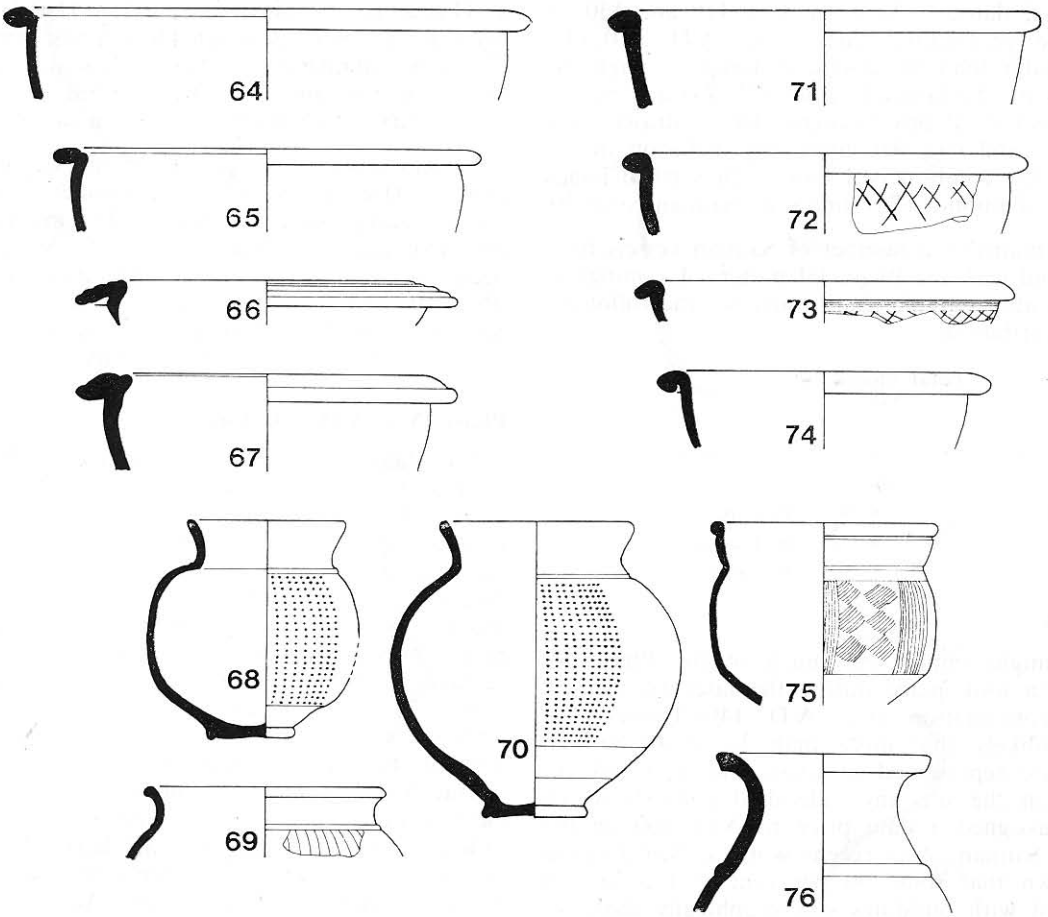

Fig. 5. Phase III (A.D. 100-140): pottery from Ditch 1.($\frac{1}{4}$)

waster dumps and in the infillings of ditches and pits. Two groups of pottery are shown to illustrate this phase (Figs. 4 and 5). An analysis of 7,520 rims from various site contexts suggests that production was concentrated in a limited range of jars, beakers, bowls and dishes made in the sandy grey Fabric C (Table 2).[19]

Form Category	Examples in Fig. 4 & 5	Total Rims 7,520 %
1. Everted-rim jars	47-50, 54, 69	45
2. Poppy beakers and beaker-like jars	51-3, 60, 63, 68, 70	18
3. Bead-rim jars	59, 61-2	8
4. Bowls and dishes with lid grooves	42-3, 64-7	18
5. Bowls and dishes without lid grooves	55-8, 71-5	10
6. Miscellaneous	73	1

TABLE 2

Pottery from the northern rubbish dump — near to Kiln 8 — is shown in Fig. 4. Decoration has been confined largely to Category 1 and 2 vessels, with white slip applied to vessels 47, 50, 51, 53 and 63, and grey slip to 49, 54 and 60. Vertical burnishing had been used to decorate the shoulders of 47-50 and comb-applied dots to 51 and 53. Part of an incised lattice pattern is visible on vessel 52. Samian found on this dump suggests that a probable date for manufacture is from near the end of the Flavian period, to perhaps a generation or so later (c. A.D. 90-120).

Fig. 5 illustrates vessels in a rubbish deposit filling Ditch 1, just south of its junction with Ditch 2. Here Samian contained in the debris included fragments

19. For an explanation of the methods used in analysis see *London Archaeol* **1**, no. 3 (1969) 60-65. A limited proportion of Fabric B vessels have been included in Table 2.

For Clive Orton's theoretical work on the pottery forms see, "An Experiment in the Mathematical Reconstruction of the pottery from Highgate Wood," *Bulletin of the Institute of Archaeology* (1974) 41-73.

of a vessel dated to between A.D. 110 and 130. A Hadrianic production date — c. A.D. 120–140, slightly later than the northern dump — might be indicated by the latticed dishes (72, 73) and by the higher necked 'Poppy beakers' (68 — drawn as a waster — and 69). An interesting inclusion in the group is the comb-incised bowl with vertical bands enclosing diamonds (75), imitating Samian form 30.

The remains of a number of Samian vessels have been found with the Phase III pottery. Examination of the readily datable sherds suggests the following period distribution.

	Total Sherds 354 %	
to c.70	4	Pre-Flavian
c. 70-100	78	Flavian
c. 100-120	8	Trajanic
c. 120-140	9	Hadrianic
c. 140+	1	Antonine

TABLE 3

This might imply that much of the Phase III production took place during the later 1st century with a continuation to c. A.D. 140. However, it seems unlikely that more than 30 or 40 Samian vessels are represented in total, and it is difficult to find on the site any individual contexts which can be assigned a date prior to A.D. 100 on the basis of Samian. Also recent work at Verulamium has shown that some 90 per cent of the Samian associated with buildings stratigraphically dated to c. 105-130 was of 1st century date.[20] This seems to imply that much of this imported pottery survived in use until the 2nd century. It might therefore be safer to regard Highgate Phase III as taking place between c. 100-140.

Possible Highgate Phase III pottery has been found in a number of the sites recently excavated in Southwark. Here the earliest examples came from Trajanic pits (c. 100-120) at St. Thomas's Street. Thin sectioning indicates a strong probability of the presence of Highgate vessels in Trajanic–Hadrianic (c. 110-130) levels filling a revetted stream at 93–95 Borough High Street. It is also found in occupation layers, probably Trajanic, at 106 Borough High Street, and Trajanic-Hadrianic pits at 207 Borough High Street.

The latticed dishes (72, 73) which are not common at Highgate, first occur in Trajanic-Hadrianic contexts in the 93-95 Borough High Street stream, but are more abundant in the succeeding Hadrianic layers. A bowl similar to the combed example (75) also occurs in the Hadrianic stream deposits.

Examination of the pottery from Aldgate shows possible Highgate vessels in a number of unsealed pits including those assigned to Trajanic-Hadrianic (Pit 15), and mid–2nd century (Pit 8), dates. Its occurrence is also likely in two pits dated as Flavian (Pits 10 and 11). The latter, however, contains Samian of A.D. 85–110, and, in the writers' view, both belong to the earlier 2nd century.[21]

Phase IV c. A.D. 140–160

The Phase IV pottery illustrated came from Kiln 2 (Fig. 6); it is differentiated from Phase III in respect of form rather than fabric, and the occurrence of new types would suggest a slightly later manufacturing date. Similar vessels come from the rubbish dump in the immediate vicinity of the kiln, but they are not present in any quantity. As in the earlier phase, most of the jars and beakers (all except the storage jar 84) are slipped, but so are two of the bowls (77 and 78), and the latticed dish (79). Of interest is the emergence of the Poppy beaker without barbotine panels (83) — perhaps more characteristic of the later 2nd century[22] — and the early cooking pots (82, 87 and 95). The former example contains a latticed band burnished through the white slip. The type seems first to occur in Southwark in the Hadrianic– early Antonine (c. A.D. 130-150) stream levels at 93–95 Borough High Street. The jars with grooved rims (80, 81) can be paralleled from the Verulamium potteries, where similar vessels, excavated in the 1930s, were thought to have been made between A.D. 120–160.[23] More recently found examples from other kilns there are thought to have been produced between A.D. 140-160, a date which would also fit well for the final phase, of Highgate production.[24]

Acknowledgements

The pottery drawings for this article were prepared by Stuart McDonald, but include vessels drawn by Ken Cockerton, Bob and Marjorie Little (Fig. 4) and Michael Stephen (Fig. 5) for their own reports as members of a City Literary Institute class. The contour map for the site plan was prepared by Robert Symberlist. Paul Tyers helped greatly in

20. S. Frere as in note 8.
21. Joanna Bird now considers that the earliest "Poppy beakers" from Aldgate are probably in early 2nd century rather than Flavian contexts.
22. "Excavations in Verulam Hills Fields," *Hertfordshire Archaeol* **1** (1968) 9-50, see Burial G.
23. "A Roman pottery of the Hadrian-Antonine period at Verulamium", *Antiq J* **21** (1941) 271-298, see Fig. V, 8a.
24. As note 22, see Fig. X, 13.

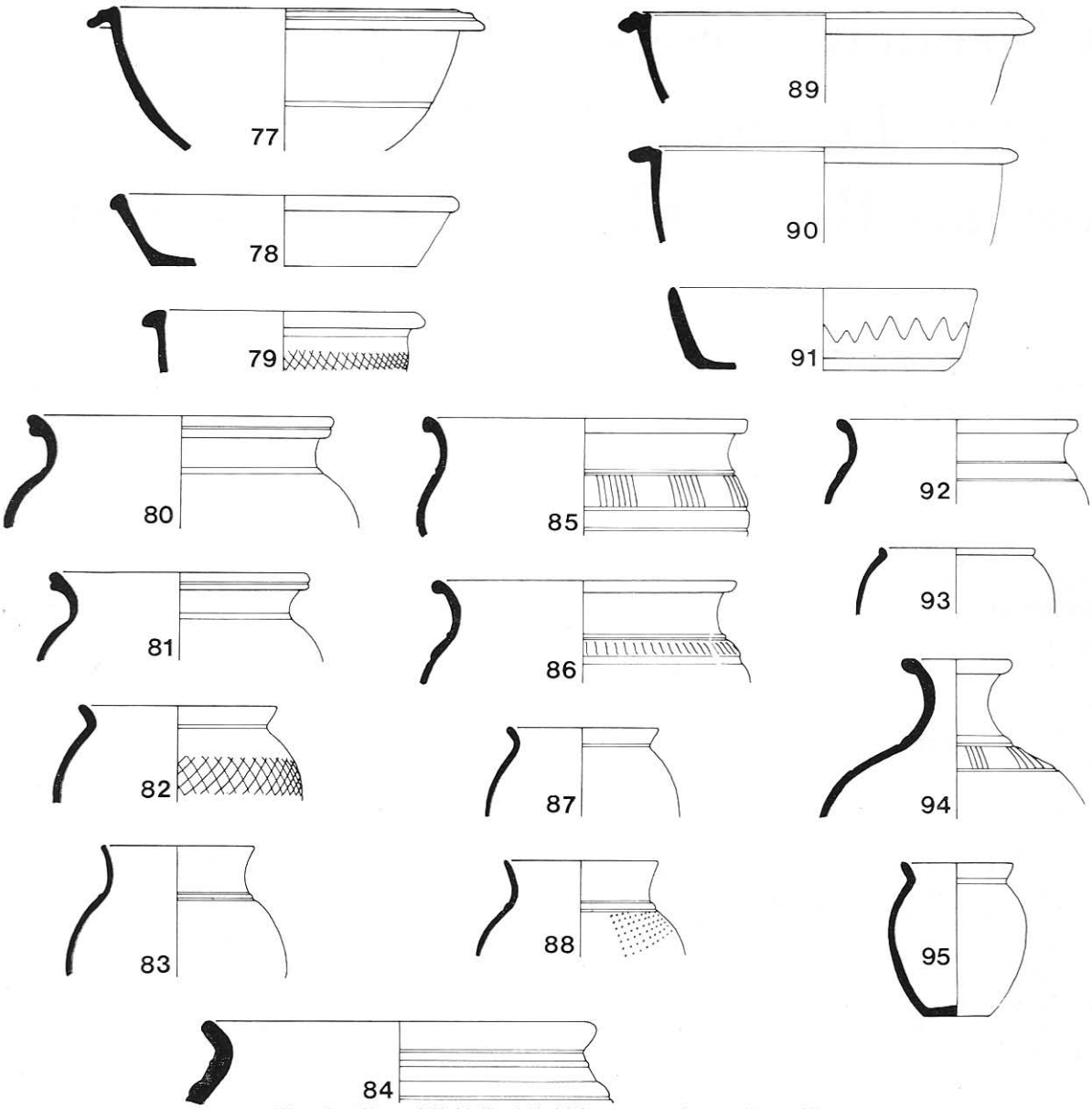

Fig. 6. Phase IV (A.D. 140-160): pottery from Kiln 2.($\frac{1}{4}$)

many ways, especially by his examination of the Southwark pottery.

The authors would like to thank those who worked on the site between 1966 and 1974, especially the site supervisors: Nick Russell, David Paisey, John Barrett, Pat Evans, Judith Plouviez, Robert Symberlist, Mike Hammerson and Eric Ferretti.

Many have taken part in the post excavation work over a long period, notably: Jean Orton, Edith Weaver, Iris Roseveare and Jill Winter.

Others have contributed their special talents to the project, and their unselfish help has greatly assisted us with this and other reports. They include: Joanna Bird (Samian), Tony Mackenna (fabric analysis), Clive Orton (statistical form analysis), Nick Peacey (kiln building), John Bell (potting).

Staff of the Guildhall, Horniman and London Museums have helped with various aspects of the excavations, which have been aided by grants from the Parks and Open Spaces Committee of the Corporation of London. Their staff in the Wood gave constant and valuable support.