DISABLED TOILET LAYOUT

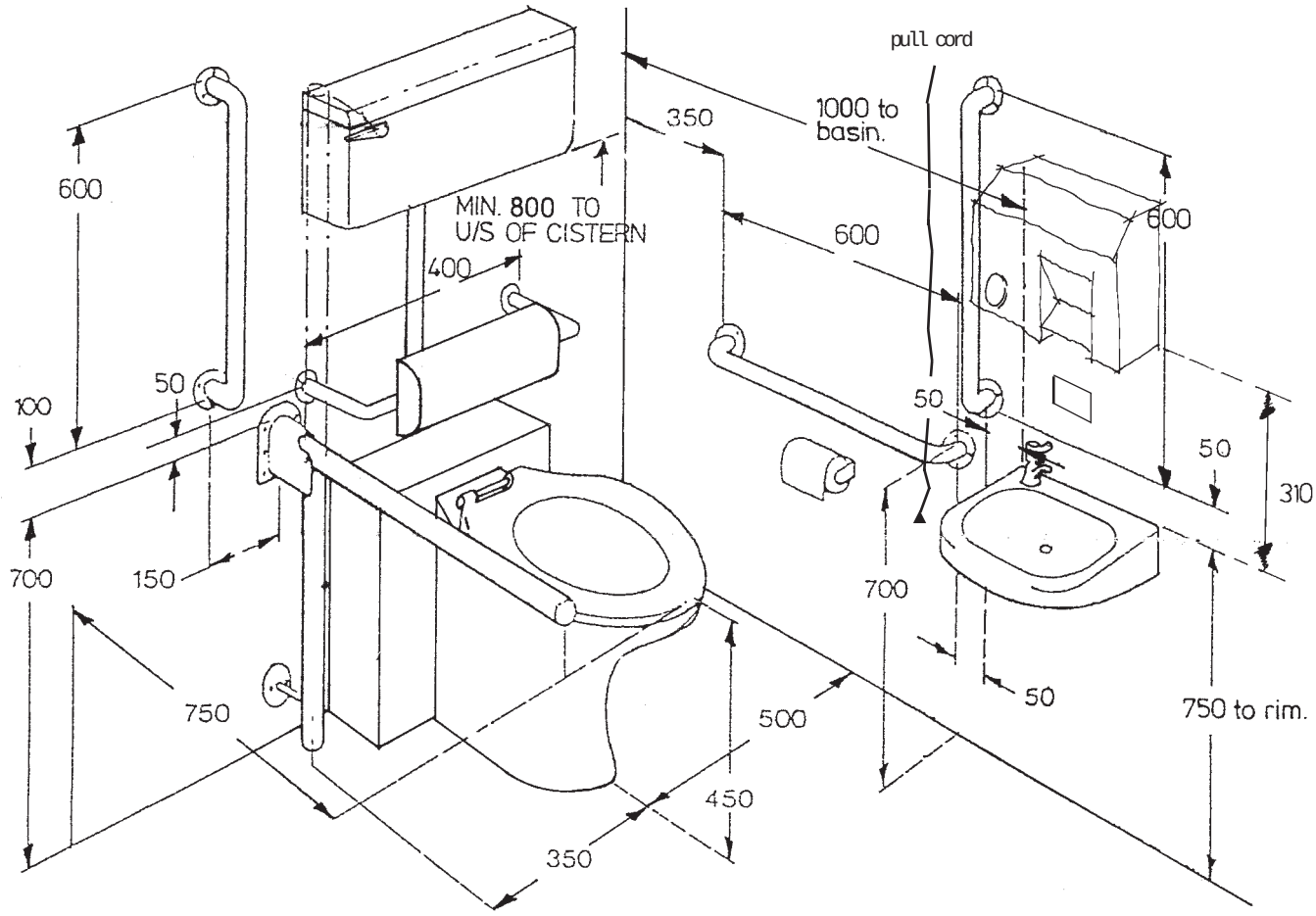

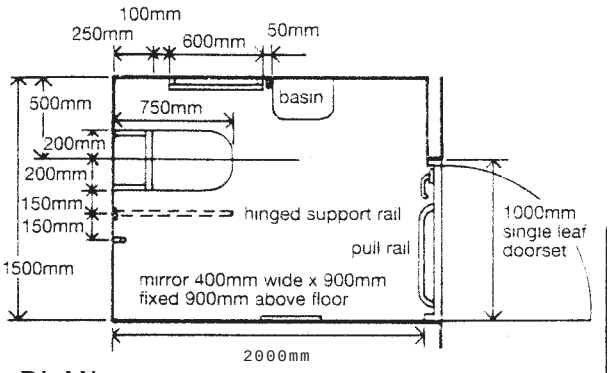

PLAN

ISSUED: 28 November 1996 **ISSUE No : M.01**

© Crown Copyright reproduced with the permission of the Controller of Her Majesty's Stationery Office. Further information can be obtained from The Buildings Regulations 1991 Approved Document M 1992 or from the Building Control Section of your Local Council. The views expressed in this document are those of the DSA and do not necessarily reflect those of the Department of the Environment or any other Government Department.

DSA
DISTRICT SURVEYORS ASSOCIATION